Dimension sheets - BKH Tunnel 50-98 green

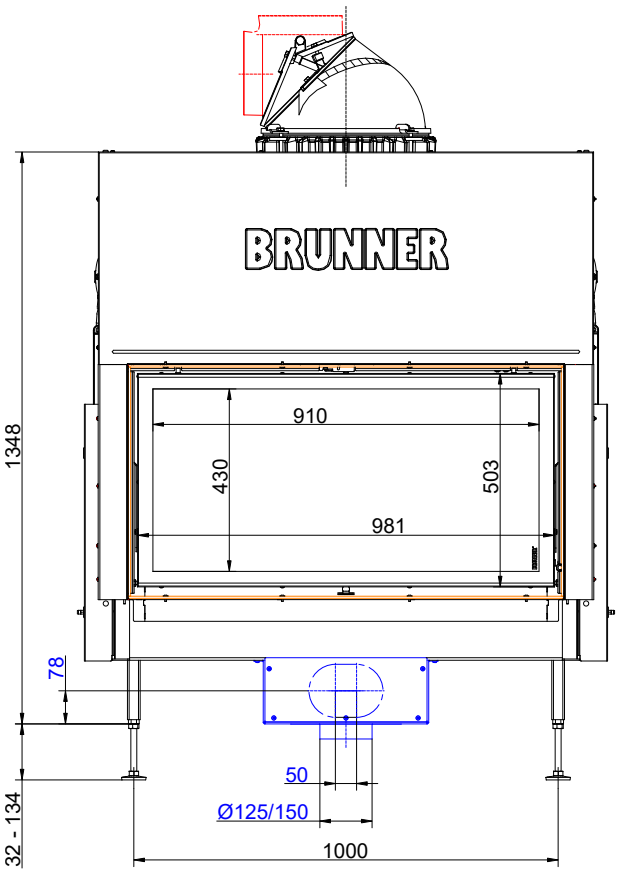

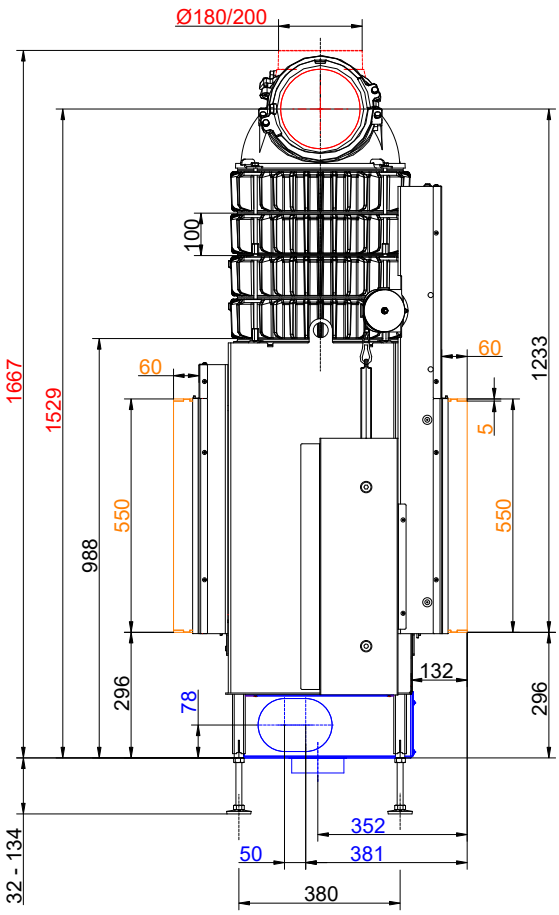

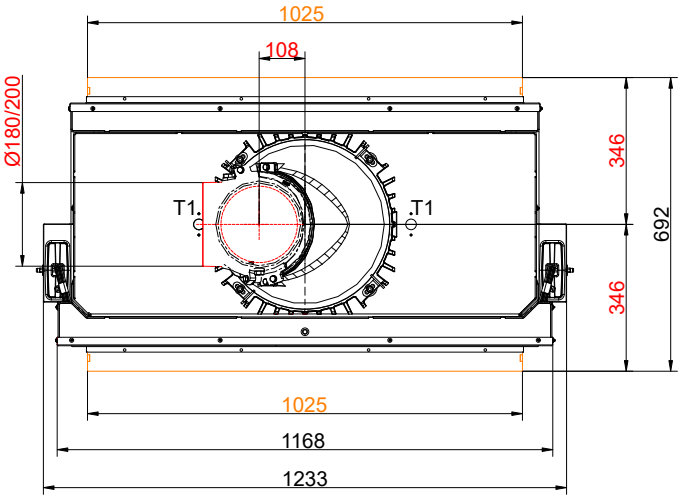

… lifting door/tilting door with mounting frame and cast iron heat exchanger rings + dome